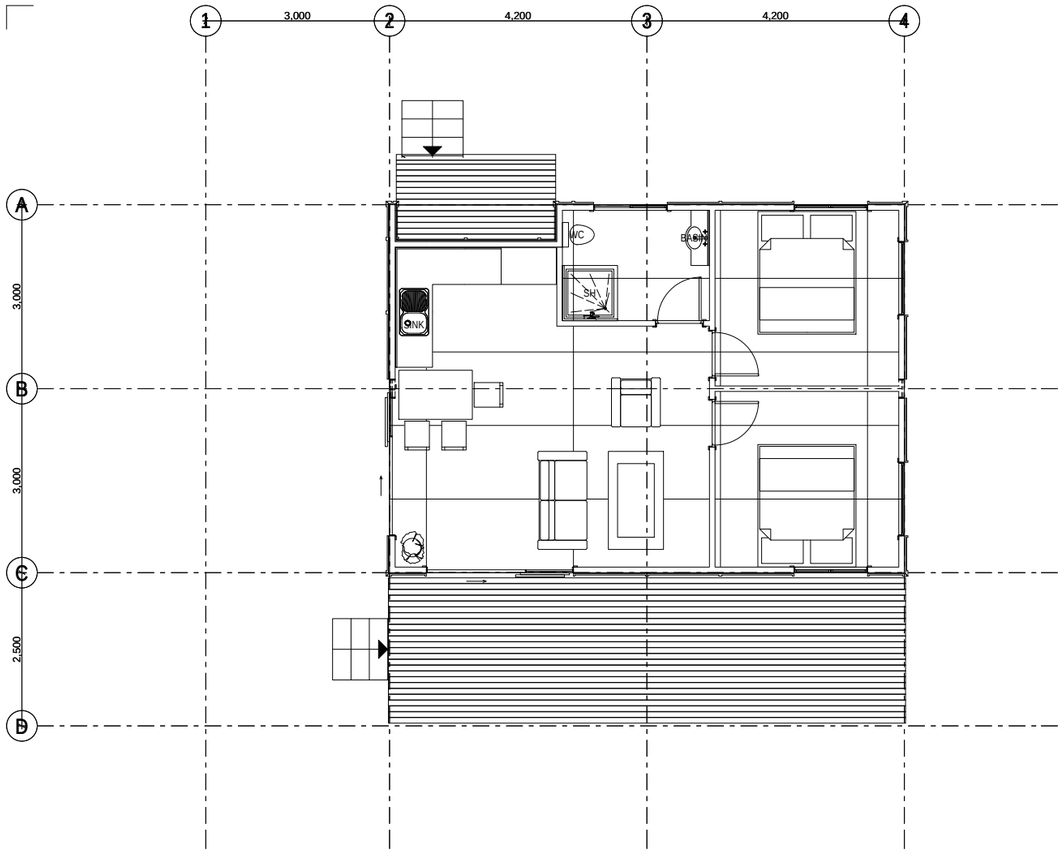


PRESENTATION PLAN
1:50

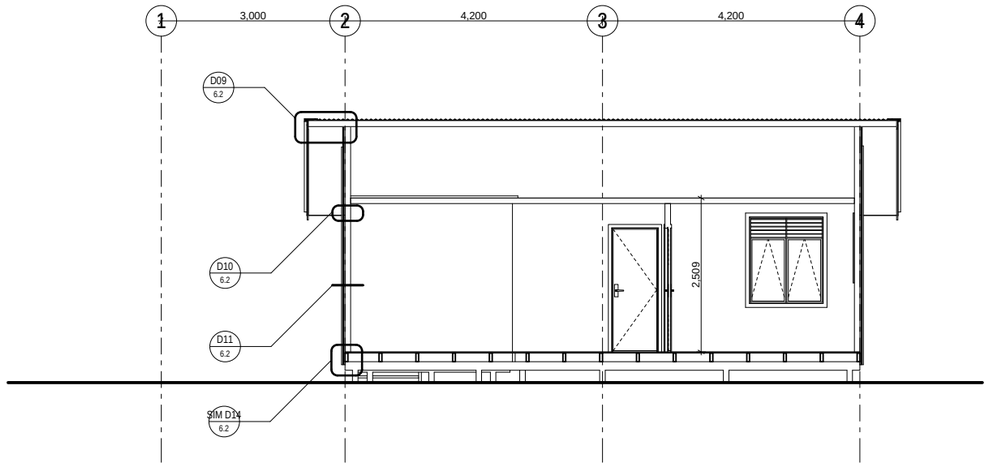


SECTION AA
1:50

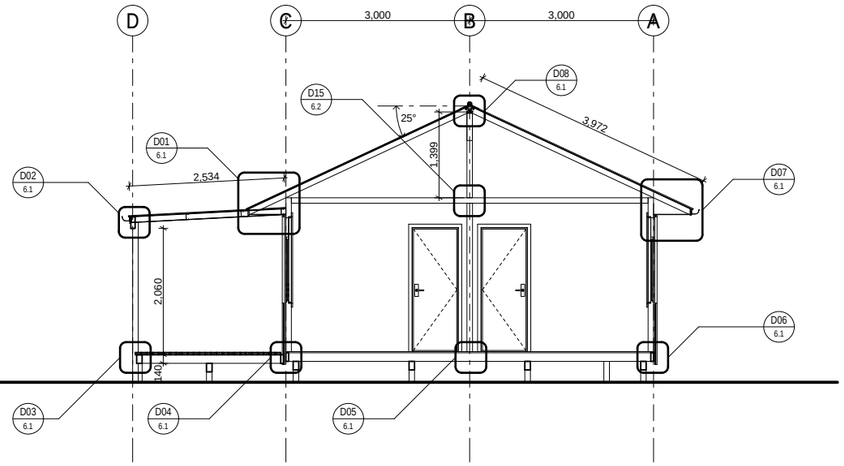


SECTION BB
1:50

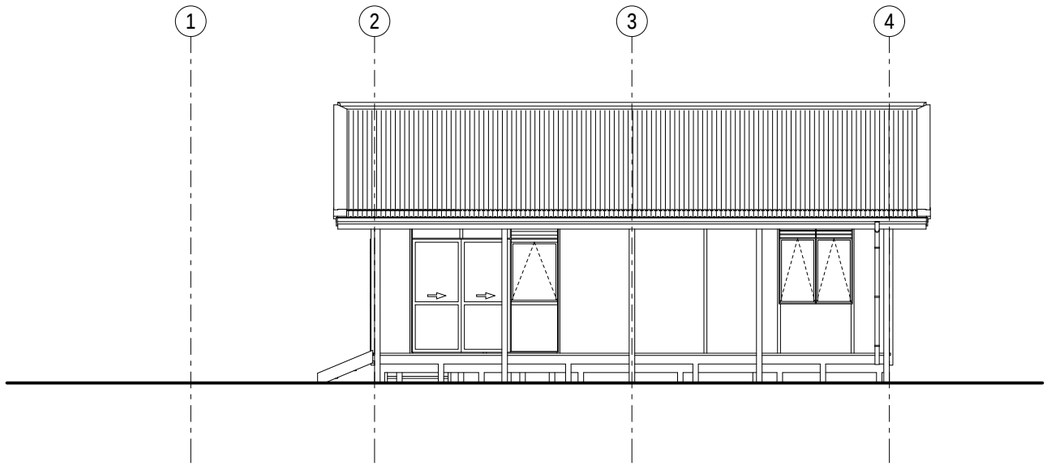


SOUTH ELEVATION
1:50

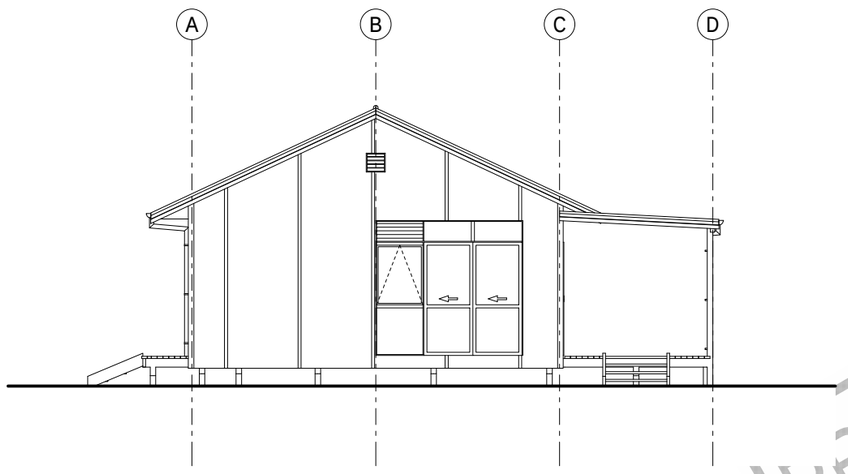


WEST ELEVATION
1:50

**NOTES:**

ALL FURNITURE & LANDSCAPING IS FOR PRESENTATION PURPOSES ONLY AND DOES NOT FORM PART OF THE OFFERING.

WORKING DRAWINGS WILL BE SUPPLIED UNIQUE TO EACH CONTRACT.

| ISSUE | AMMENDMENT | BY | DATE |
|---|---|---|---|
| O | ORIGINAL | BD | PRELIMI |

This drawing and its contents are the property of Donelley Group Limited. Any unauthorised employment or reproduction, in full or in part, is forbidden.

© Donelley Group Limited

donelleygroup

DONELLEY GROUP LTD - DESIGN & MANAGEMENT

ADDRESS: 761A PURANGI ROAD
COOKS BEACH, RD1
WHITIANGA
NEW ZEALAND

CONTACT: PHONE: +64 7 866 4039
FAX: +64 7 866 4039
EMAIL: john@ejdonelley.co.nz

CLIENT:
**DONELLEY GROUP**

PROJECT:
**MOOREA**

AT:
TBA, TBA

LAYOUT CONTENTS:
**PRESENTATION**

PRELIMINARY

ISSUE: PRELIMINARY

ISSUE DATE: PRELIMINARY | DRAWN BY: BD | CHECKED BY: JD

FILE: 14143_Moorea_DD_20090522_Insider.pln

SCALE: 1:50 | ISSUE: PRELIMINARY

| JOB NO: | SHEET: | OF: | REVISION: |
|---|---|---|---|
| 14143 | 12.1 | 11 | O |

ORIGINAL SIZE: A1 | ALL DIMENSIONS TO BE VERIFIED ON SITE